Underground Light LED Lamp Series

Data Sheet

UG-HXX9WS

AC/DC 24V, 9W

Features:

- No UV or IR light radiation.
- Provide 45º beam angles.
- Easy Installation.
- Low Power Consumption: Less than 9 Watts.
- Long lifetime: 25000 hours (L_{70}).
  Sturdy Construction:
- UV Stabilized toughened glass and Aluminium alloy Lamp shell.
- High CRI: 70-85
- Correlated Color Temperature:2700-6500K.
- Operating temperature: -20℃~+60℃.
- 24V AC/DC input.
- Waterproof:IP68.

Benefits:

- Energy Cost Savings:
  Over 60% Compared to Incandescent.
- Solid-State:
  High-Shock & High-Vibration Resistant,
  Both Electrical and Mechanical
- Energy Cost Savings:
- Eco-Friendly:
  No Mercury, No Lead Content
- No Hazardous Emissions:
  No UV or IR Radiation
- Constant Light Output:
  Even Lighting, Non-Halation

Applications:

- Tourist attractions lighting
- Green area lighting
- Fountain lighting
- Other Lighting

Product Specifications:

Diffuser	Glass
Input Voltage	24V AC/DC
IP	IP68
Wattage	9W
Power Factor	PF≧0.5
Operating frequency	50-60Hz
Operating Temperature	-20℃ ∽ +60℃
Storage Temperature	-30℃ ∽ +70℃
Net Weight per piece (Kg)	1KG
Certifications	RoHS Compliant

Product Selection Guide:

Part No.	Beam Angle	Total Lumens	CCT	Color	CRI
UG-HWW9WS	45º	750±5%	2700-3500K	Warm White	≧70
UG-HW9WS	45º	800±5%	5500-6500K	White	≧70

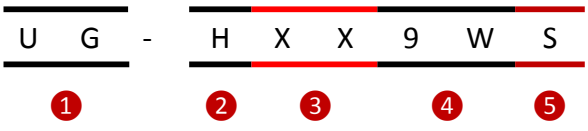

❶	UG:	Product Type
❷	H:	High Power LED
❸	XX:	WW-Warm White W-White
❹	9W:	The single LED power is 9W
	S:	AC/DC 24V

Product Dimensions:

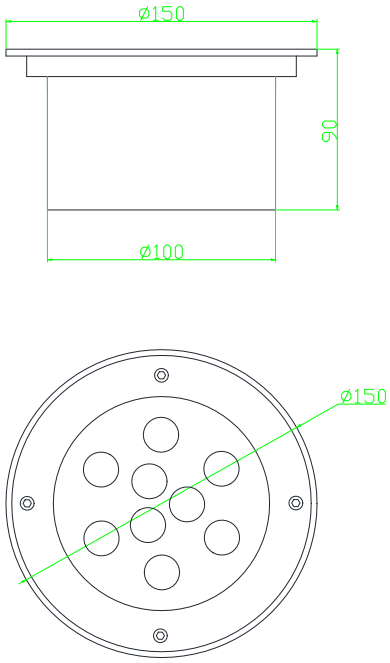

Notes:

1. All dimensions unit in mm
2. Tolerances are ±0.5mm unless otherwise noted.

Package Dimension:

Small carton
165L*100W*165Hmm
(6.50"L*3.94"W*6.50"H)
1pcs Under ground light inside

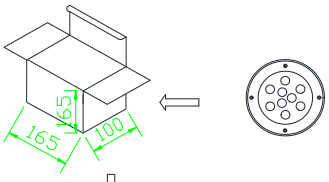

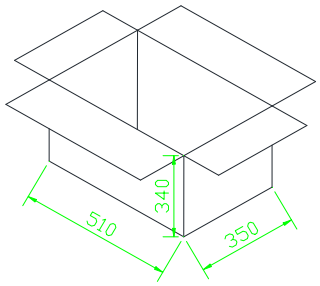

Big carton
510L*350W*340Hmm
20.08"L*13.78"W*13.39"H
20pcs Under ground lights inside

Installation Instructions and Warnings:

- Turn off power before inspection, installation, or removal.
- Not for use where exposed to the weather
- Do not use in totally enclosed fixtures.
- Not for use with dimmers.
- Please make sure to use a suitable adapter. Please mind the minimum load of your adapter.

Notes:
The part number, type, and specifications mentioned in this document are subject to future change and improvement without notice. Before production usage customer should refer to the latest datasheet for the updated specifications.